bel AEROSPACE & DEFENSE | Networking Products

MILTECH™ 9116 TSN

8 x 1000Base-T + 4 x1000/10GBase-T + 4 x1/10G F/O L2/L3 Ethernet Switch with Full TSN, Input/Output clocks

MILTECH 9116 TSN is a member of the super-speed TSN Ethernet switches, aimed at providing advanced timing solutions for military applications on top of a standard Ethernet switch (such as MILTECH 9116).

Providing 8 x 10/100/1000Base-T ports, 4 x 100/1000/10GBase-T, 4 x 1/10G F/O, 1PPS, and 10MHz (In and Out), this switch is designed to support networking and precise timing applications such as manned/autonomous vehicles, Avionics, UAVs, and mobile equipment in battlefield environments supporting super-speed networking and time precision.

MILTECH 9116TSN supports advanced Time-Sensitive Networking (TSN) features, including Time-Aware Shaper (TAS), Frame Preemption, and Per-Stream Filtering and Policing (PSFP). These capabilities ensure deterministic data delivery and low-latency communication, which is essential for real-time military applications.

Along with most common routing protocols such as RIP, OSPF and IPv6 Static routing, the switch's hardware-based timestamping and synchronization mechanisms, compliant with IEEE 802.1AS and IEEE 802.1Qbv standards, enable precise time coordination across networked devices. The MILTECH 9116TSN's support for multiple timing domains and seamless integration with existing network infrastructure make it a versatile solution for complex, mission-critical environments.

Equipped with MIL circular connectors that meet the NGVA standards and a durable enclosure, the MILTECH 9116TSN is designed to withstand harsh conditions with ease.

MILTECH 9116TSN is designed to meet the IP67, MIL-STD-810: thermal, shock, vibration, altitude, humidity, along with MIL-STD-461 EMI/EMC

Wide range of DC input (18-48VDC) and MIL-STD-1275/704 power supply allows easy integration in existing and new solutions

The durable design, flat mounting surface, and RoHS / REACH compliance make the MILTECH 9116TSN suitable for almost any application

NON ITAR

AS9100D CERTIFIED ISO 9001

SPECIFICATIONS

ETHERNET PORTS:	• 8 x 10/100/1000Base-T ports • 4 x 100/1000/10GBase-T ports • 4 x 1/10G F/O ports (SM or MM, see ordering information)
CLOCK PORTS:	• 1x 1PPS (In and Out): RS422/TTL/LVTTL • 1x 10MHz (In and Out): Square waveform , TTL/LVTTL Input clocks are configurable, and can be changed on the fly using CLI command
TSN / TIMING: Capabilities:	• SyncE with SSM support • SyncE combined with 1588 • PTP Profiles • 1588v2 PTP with one / two step clock • NTPv4 Client • Boundary Clock • DPLL configuration for different clocks inputs /outputs • TC internal Master/Slave w. PDV filtering • Redundant masters and multiple timing domains • Peer-to-peer transparent clock over Ethernet/IPv4 • End-to-end transparent clock over Ethernet/IPv4 and IPv6 • Unicast/Multicast • IEEE-802.1Qbv (TAS) Time-aware Scheduler • IEEE-802.1Qbu & 802.3br Frame Preemption • IEEE-802.1Qci ingress gating/policing/checking • IEEE-802.1CB (FRER) • IEEE802.1AS-2011/IEEE802.1AS rev D4.2 G.781 compliant clock selection algorithm for the platform as a PTP slave

NETWORKING:
L2/L3 capabilities
	• Software-based IPv4 dynamic routing and IPv6 static routing
	  • RIPv2
	  • OSPFv2, OSPFv3
	  • Static routing
	• MAC: Static / Auto learning
	• VLAN (MAC based, IP based, Protocol based, Subnet based), iPVLAN / VLAN trunking
	• Bidirectional / unidirectional VLAN translation
	• Multiple VLAN Registration Protocol
	• Spanning Tree Protocol / Rapid Spanning Tree Protocol / Multiple Spanning Tree Protocol
	• Loop guard and loop free operation
	• Media redundancy protocol / interconnect
	• Ring protection V1/V2
	• Link aggregation
	• sFlow

NETWORKING: Security	• MACSec Support using PCH/MCH Headers • ACLs for filtering/policing • Port isolation, control and security and port based 802.1X • Spoofing and inspection: DHCP, IGMPv2/v3, MLDv1/v3, ARP • Port mirroring / Remote mirroring / Flow mirroring • IEEE 802.1Qbb (Flow control) • DHCPv6 Shield • VLAN assignment • QoS assignment (auto, manual) • MAC address limit and authentication • IP/MAC binding (dynamic, static) • IP source guard • RADIUS authentication, authorization and accounting • TACACS+ authentication, authorization, accounting

SPECIFICATIONS

NETWORKING: Additional capabilities	• Ingress policing • Rate limit • Egress queuing/shaping • Jumbo frame size support
NETWORKING: Management	• Management interfaces: Web UI, CLI, Telnet, HTTPS, SSH • Monitoring: SNMP, RMON • Services: DHCP client and server, DNS client, FTP/Secure FTP Client • Operation: Management access filtering, System syslog, IPv4/IPv6 ping and traceroute • Remote update • Secured boot
LED INDICATION	• Power • Status (Built-In Self-Test) • Per port indications: Link/Activity • 1PPS In and Out • 10MHz In and Out Dark mode enable/disable by firmware
POWER:	• Power Input: 28VDC Nominal (16-50V) • Power Consumption: 62W Max • Chassis grounding
EMC/ENVIRONMENTAL:	Designed to Meet: • MIL-STD-461F • MIL-STD-810 • MIL-STD-1275 • MIL-STD-704 • IP67 • ROHS/REACH Compliance
CHASSIS:	• Low profile rugged machined aluminum • Conductively cooled • Ingress protection against sand, dust and moisture • Material: AL6061-T651 per AMS QQ-250/11 • Anodize Coating, MIL-A-8625, Type II, Class 2, Black color
PHYSICAL:	• Dimensions: 344.0mm(L) x 204.0mm(W) x 79mm(H), excluding connectors • Dimensions: 13.54”(L) x 8.03” (W) x 3.11”(H), excluding connectors • Weight: 4Kg (8.82 lbs.)
COOLING:	• No Moving Parts. Passive Cooling
TEMPERATURE:	• Operational: -40ºC to +71ºC (-40ºF to +160ºF) • Storage: -55ºC to +80ºC (-67ºF to +176ºF)
CONNECTORS:	• J1 Power: D38999/24ZC04PN • J2,3 F/O : EB4H8000-3443 (S/M), EB4H8000-3413 (M/M) • J4 10G ETH: 10-646406-055N • J5 1G ETH: D38999/24ZF35PN • J6 Clocks: 10-646401-663N Chassis ground: #8-32 UNC stainless steel screw

A

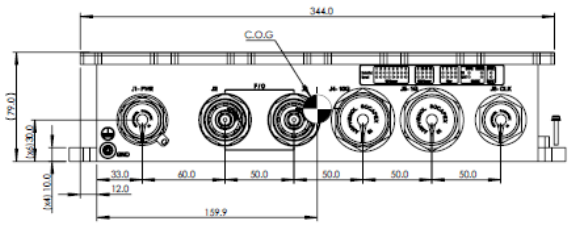

B

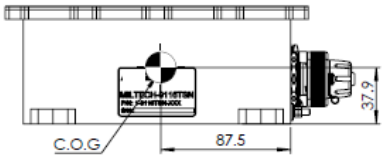

C

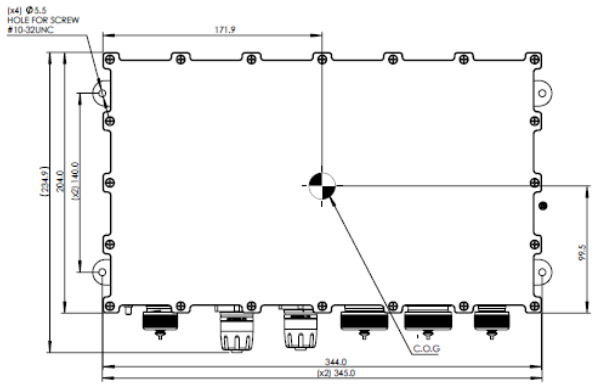

D

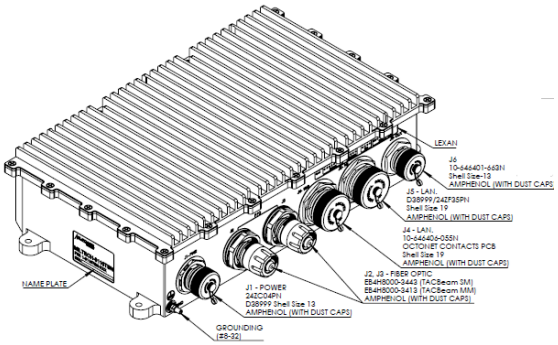

ORDERING INFORMATION

PART NUMBER	DESCRIPTION
1-9116TSN-000	16 Port, 1G/10G switch with TSN (IEEE 802.1Q) and Input/Output clocks, Square 10MHZ waveform, 10G Single-Mode Fiber
1-9116TSN-010	16 Port, 1G/10G switch with TSN (IEEE 802.1Q) and Input/Output clocks, Square 10MHZ waveform, 10G Multi-Mode Fiber
2-CBL9116TSNKIT	MILTECH 9116TSN Cable Set with Multi-Mode Fibers
2-CBL9116TSNKIT2	MILTECH 9116TSN Cable Set with Single-Mode Fibers