M1156 SERIES

PRELIMINARY

COMPACT, HIGH DENSITY, HIGH EFFICIENCY, SINGLE OUTPUT,
THREE-PHASE AC / DC CONVERTERS
Up to 500 W

Applications

Military (Airborne, ground-fix, shipboard), Ruggedized, Telecom, Industrial Power Supply

Special Features

- Miniature size
- High efficiency
- Wide input range
- Input / Output isolation
- Remote Inhibit (On/Off)
- Fixed internal switching freq.
- External sync. capability
- Power factor 0.8-0.9 @ full load
- EMI filters included
- Non-latching protections:
  - Overload / short-circuit
  - Over temperature

Electrical Specifications

AC Input
Voltage range:
115 (103-127)* $V_{AC,L-N}$ 50/60/400 Hz, 3-phase

*Optional extended range:
(95-140 V_{AC}) Consult factory

DC Output
Voltage range: 5 to 50 V_{DC}
Current: 0 to 25 A
Power output: 0 to 500 W

Isolation
Input to Output: 500 V_{DC}
Input to Case: 500 V_{DC}
Output to Case: 100 V_{DC}

Line/Load regulation:
Less than ±1% (low line to high line voltage, no load to full load, –55 °C to +85 °C).

Efficiency
90% - Typical (full load, room temperature)

EMC
Designed to meet† MIL-STD-461F (CE102, CS101, CS114, CS115, CS116, RE101, RE102, RS101, RS103) with M1289 line filter

Designed to also meet CE101 with M1289 line filter, for loads up to 200W.

Ripple and Noise:
50-150 mV_{p-p}, typical (max. 1%) without external capacitance. Additional load capacitance reduces ripple significantly.

Turn on Transient
No Voltage over shoot during power on.

Protections **

General

- **Over temperature protection**
  Shutdown at base plate temperature of +105 °C ± 5 °C. Automatic recovery at base plate temperature lower than +95 °C ± 5 °C.

Output

- **Passive transorb on outputs**
  20% above nominal voltage.
- **Current limiting**
  Continuous protection (10-30% above maximum current) for unlimited time.

** Thresholds and protections can be modified / removed – please consult factory.
† Compliance achieved when tested with shielded cables and static resistive load

Ask us about our complete line of power and networking products.
sales-aerodef@belf.com • www.bel-aerospace-defense.com

Environmental Conditions

Designed to meet MIL-STD-810F

Temperature
Operating:
–55 °C to +85 °C (at baseplate)
Storage:
–55 °C to +125 °C (ambient)

Altitude
Method 500.4
Procedure I (non-operational): Up to 70,000 ft.
Procedure II (operational):
Up to 40,000 ft.

Salt Fog
Method 509.4

Humidity
Method 507.4
Up to 95% RH

Vibration
Method 514.5
Category 24 - General minimum integrity exposure
1 hour per axis

Shock
Method 516.5
Saw-tooth, 20 g peak, 11 ms.

Reliability

At least 150,000 hours.
Calculated IAW MIL-HDBK-217F Notice 2 with +85 °C baseplate temperature at Ground Fix conditions.

Environmental Stress Screening (ESS)

Including random vibration and thermal cycles is also available. **Please consult factory for details.**

Ask us about our complete line of power and networking products.
sales-aerodef@belf.com • www.bel-aerospace-defense.com

Pin Assignment

J1 - Input Connector

Connector type: M24308/24-37F or eq.
Mating connector type: M24308/2-1F or eq.

Pin #	Function	
1	Phase A	●
2	N.C.	
3	Phase B	●

Pin #	Function	
4	Phase C	●
5	Chassis	
6	Phase A	●

Pin #	Function	
7	N.C.	
8	Phase B	●
9	Phase C	●

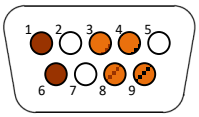

J2 - Output Connector

Connector type: M24308/23-39F or eq.
Mating connector type: M24308/4-3F or eq.

Pin #	Function	P	
1	SENSE	+	⊘
2	SYNC	+	●
3	INHIBIT	+	●
4	OUT RTN	–	●
5	OUT RTN	–	●
6	OUT RTN	–	●
7	OUT RTN	–	●
8	OUT RTN	–	●
9	OUT	+	●

Pin #	Function	P	
10	OUT	+	●
11	OUT	+	●
12	OUT	+	●
13	OUT	+	●
14	SENSE RTN	–	⊘
15	SYNC RTN	–	○
16	OUT RTN	–	●
17	OUT RTN	–	●
18	OUT RTN	–	●

Pin #	Function	P	
19	OUT RTN	–	●
20	OUT RTN	–	●
21	OUT	+	●
22	OUT	+	●
23	OUT	+	●
24	OUT	+	●
25	OUT	+	●

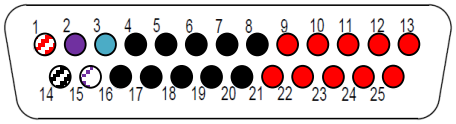

Note: All output pins with same designation should be connected together for best performance.

Ask us about our complete line of power and networking products.
sales-aerodef@belf.com • www.bel-aerospace-defense.com

Functions and Signals

INHIBIT (connector J2, pin 3)

Description: The ***INHIBIT*** signal is used to turn the power supply ON and OFF.

Operation: Applying "1"or leaving open will turn the power supply ON.
Applying "0" or shorting this pin to ***OUT RTN*** will turn the power supply OFF.
For constant operation, leave this pin unconnected.

Signal Type: 5V TTL or dry contact (open/short).

Return line: This signal is referenced to ***OUT RTN*** (connector J2, pins 4-8, 16-20).

SYNC (connector J2, pin 2)

Description: The ***SYNC*** signal can be used to allow the power supply switching frequency to synchronize with a system clock.

Operation: Apply a square wave clock with frequency in the range of 250 kHz ± 10 kHz and duty-cycle of 50% ± 10%., TTL level.
If not required, leave open. The power supply will work at 250 kHz ± 10 kHz (internal clock).

Signal Type: 5V TTL

Return line: This signal is referenced to ***SYNC RTN*** (pin 15).

SENSE (connector J2, pin 1)

Description: The ***SENSE*** function is used to achieve accurate load regulation at load terminals.

Operation: Connect the pins directly to the load terminals.
The correction ability is limited to 2 to 10% of nominal voltage output, and up to 2 V.
Note that if sense correction function is not needed, the sense lines must be shorted to their respective output pins: ***SENSE*** (pin 1) to ***OUT*** pins (9-13, 21-25) and ***SENSE RTN*** (pin 14) to ***OUT RTN*** (pins 4-8, 16-20).

Signal Type: 5V TTL

Return line: This signal is referenced to ***SENSE RTN*** (connector J2, pin 14).

Ask us about our complete line of power and networking products.
sales-aerodef@belf.com • www.bel-aerospace-defense.com

Typical Connection Diagram

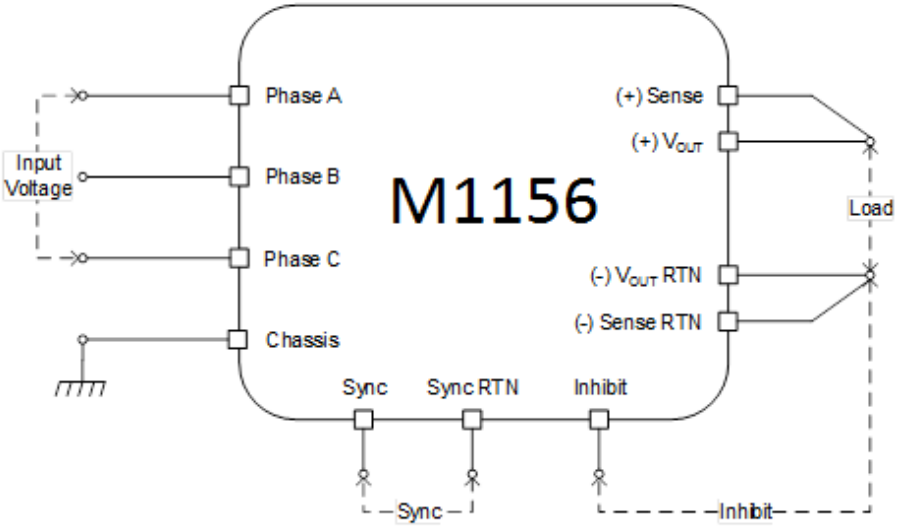

Ask us about our complete line of power and networking products.
sales-aerodef@belf.com • www.bel-aerospace-defense.com

Outline Drawing

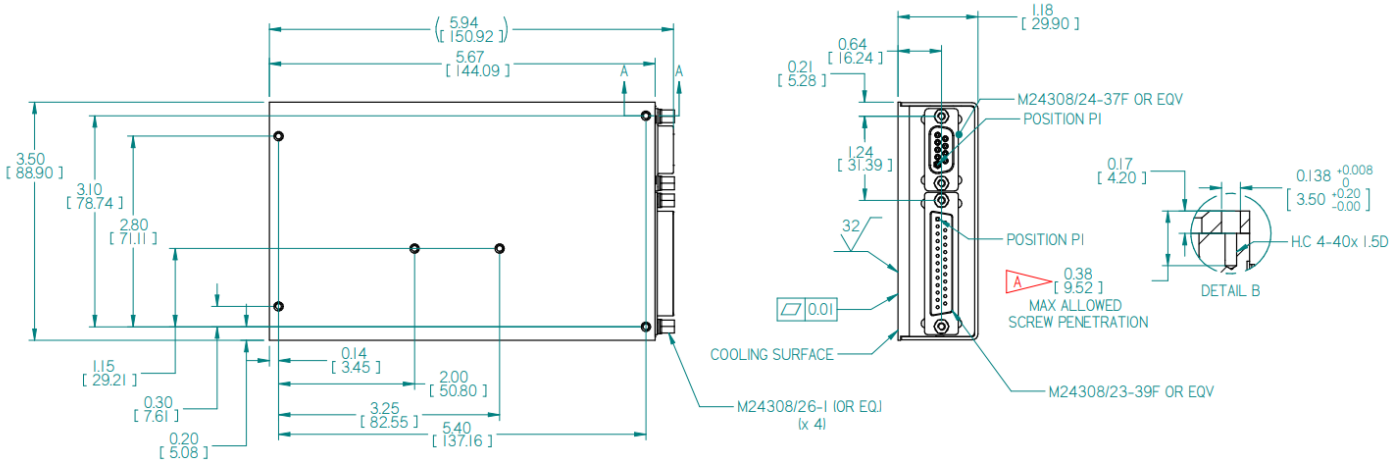

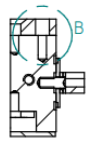

SECTION A-A
TYP x6
2:1

NOTES :

1. HEAT DISSIPATION AREA - TOTAL AREA 19.1 IN²
2. WORKMANSHIP SHALL BE MIL-STD-454, REQT. 9
3. MTL. AL 6061-T651& AL 5052-H32
4. CONVERSION COATING PER MIL -C-5541 CL 1A

UNLESS OTHERWISE SPECIFIED
DIMENSIONS ARE IN INCH [MM].
TOLERANCES ARE:

DECIMALS	ANGLES
.XX ± 0.02	± 5°
.XXX ± 0.01	

DO NOT SCALE DRAWING

Heat Dissipation Surface

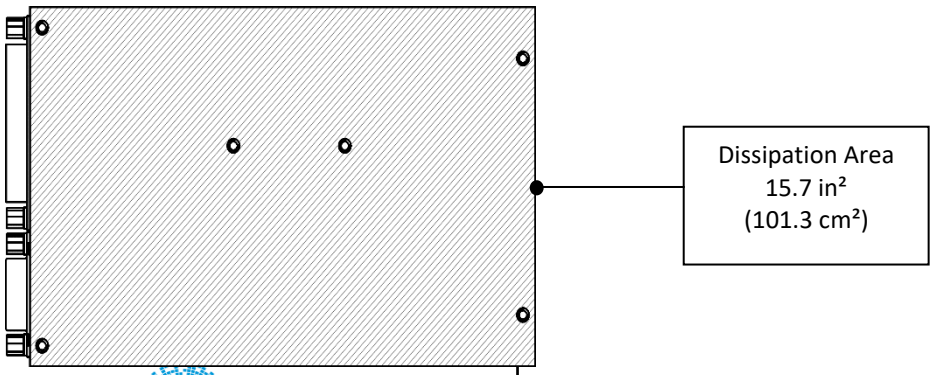

Notes

1. Dimensions are in Inches [mm]
2. Tolerance is:
   .XX ± 0.02 IN
   .XXX ± 0.01 IN
3. Weight: Approx. 1.534 lbs [696 g]

Ask us about our complete line of power and networking products.
sales-aerodef@belf.com • www.bel-aerospace-defense.com

Standard Variants

Part number	Normal input voltage range	Output configuration
M1156-100	103 to 127 V_{AC} / 50 to 400 Hz	5 V_{DC} / 20 A
M1156-101	103 to 127 V_{AC} / 50 to 400 Hz	12 V_{DC} / 20 A
M1156-102	103 to 127 V_{AC} / 50 to 400 Hz	15 V_{DC} / 20 A
M1156-103	103 to 127 V_{AC} / 50 to 400 Hz	24 V_{DC} / 20 A
M1156-104	103 to 127 V_{AC} / 50 to 400 Hz	28 V_{DC} / 18 A
M1156-105	103 to 127 V_{AC} / 50 to 400 Hz	48 V_{DC} / 10.4 A

Note: Specifications are subject to change without prior notice by the manufacturer

Ask us about our complete line of power and networking products.
sales-aerodef@belf.com • www.bel-aerospace-defense.com