M4071 SERIES

3-PHASE AC/DC POWER SUPPLY

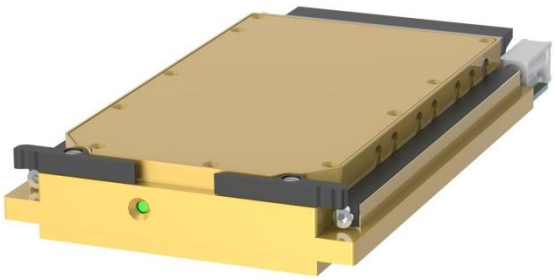

PRODUCT HIGHLIGHTS

- **1.0 PITCH, 3U VPX FORM FACTOR**
- **HIGH POWER OUTPUT + AUX OUTPUT**
- **UP TO 800W**

Ask us about our complete line of power and networking products.
sales-aerodef@belf.com • www.bel-aerospace-defense.com

Applications

Military (Airborne, ground-fix, shipboard), Ruggedized, Telecom, Industrial Power Supply

Special Features

- 1.0 Pitch, 3U IAW VITA 62
- High efficiency
- Input / Output isolation
- EMI filters included
- Fixed switching frequency
- Remote Inhibit
- Remote Enable
- Non-latching protections:
  - Short-circuit/overload
  - Output over-voltage
  - Over temperature

Electrical Specifications

AC Input

103 to 125 $V_{phase\text{-}Neutral}$
400 Hz
Three-Phase

Optional: 80Vac and 180Vac transients IAW MIL-STD-704F. **Please consult factory.**

DC Outputs (standard version)

VS1	28 V_{DC}	30 A
3.3V_Aux	3.3 V_{DC}	0.4 A

Optional: VS1 peak power of 1000 W for short time. **Please consult factory.**

Isolation

Input to Output: 1000 V_{DC}
Input to Case: 1000 V_{DC}
Output to Case: 200 V_{DC}

Output voltage regulation

±1% or better (no load to full load, low line to high line,
–40 °C to +71 °C at card edges).

Efficiency

Typical 90% (Nominal line, nominal load, room temperature)

EMC

Internal EMI filter included.
Compliance with MIL-STD-461F CE102, CS101, CS114, CS115 & CS116 possible with external filter.

Ripple and Noise

Less than 100 $mV_{p\text{-}p}$, typical (max. 1%) without external capacitance. When connected to system capacitance ripple drops significantly.

Output Under-and-overshoot

Output impedance at load step of 50%-100% is 30 to 120 mΩ (depending on output voltage). Output resumes steady-state within 300-500 µs.

Ask us about our complete line of power and networking products.
sales-aerodef@belf.com • www.bel-aerospace-defense.com

Protections (Thresholds and protections can be modified / removed – please consult factory).

Input

- **Inrush Current Limiter**
- **Under Voltage Lock-Out**
  Unit shuts down when input voltage is below 90 V_{ac}.

Output

- **Active Over-Voltage**
  Threshold set at 110% ± 5% of nominal voltage.
- **Passive Over-Voltage**
  Threshold selected at 120% ± 10% of nominal voltage.
- **Overload / Short-Circuit**
  Protected against indefinite short circuit by a hiccup mechanism (periodical off/on until short is removed).
  Threshold set at 120% ± 10% of maximum current.

General

- **Over-Temperature Protection:**
  Shutdown if temperature exceeds +95 ± 5 °C.
  Automatic recovery upon cooldown to below +85 ± 5 °C.

Environmental Conditions

Designed to meet MIL-STD-810G

Temperature

Operating: –40 °C to +71 °C (at plug-in card edge, IAW VITA 62 CC3)
Optional: –40 °C to +85 °C
Please contact factory for details and a quote.
Storage: –55 °C to +105 °C

Altitude

Method 500.5, Procedure II (Operational)

Salt Fog

Method 509.5

Humidity

Method 507.5
Up to RH 95%

Vibration

Method 514.6
Procedure I
Category 24 - General minimum integrity exposure

Shock

Method 516.6
Procedure I
Saw-tooth, 20g peak, 11ms.

Reliability

At least 100,000 hours, calculated IAW MIL-HDBK-217F Notice 2 at +85°C at wedge lock edge, Ground Fix condition.

Environmental Stress Screening (ESS)

100% of units are tested at minimum and maximum operational temperature, in addition to an ATP in room ambient. Random vibration and thermal cycles can be added if required. **Please contact factory for details and a quote.**

bel AEROSPACE & DEFENSE
Ask us about our complete line of power and networking products.
sales-aerodef@belf.com • www.bel-aerospace-defense.com

Pin Assignment

Connector P0

Connector type: TE 2332791-1 or eq.
Mating connector type: TE 2332795-1 or eq.

Pin Number	Signal Name	Function
LP1	PHASE A	Input voltage phase A
LP3	PHASE B	Input voltage phase B
LP5	PHASE C	Input voltage phase C
LP7	NEUTRAL	N/C
LP9	HOLDUP_P	Positive output/input to/from holdup module
LP11	HOLDUP_N	Negative output/input to/from holdup module
LP13	CHASSIS	Chassis
A1	GA0*	N/C
A2	GA1*	N/C
A3	SYS_RESET*	N/C
B1	SM0	N/C
B2	SM1	N/C
B3	UD0	N/C
C1	UD1	N/C
C2	INHIBIT*	Output disable signal
C3	FAIL*	Failure indication signal
D1	SIGNAL_RTN	Return line for signals and 3.3V_AUX
D2	ENABLE*	Input enable signal
D3	3.3V_AUX	Auxiliary voltage, isolated from the main output
P1	OUTPUT	
P2	OUTPUT_RTN	

PART NUMBER	ROWS	POWER													SIGNAL			POWER	
		LP1	LP2	LP3	LP4	LP5	LP6	LP7	LP8	LP9	LP10	LP11	LP12	LP13	1	2	3	P1	P2
1-6450839-4	D	LM	-	LM	-	LM	-	LM	-	LM	-	LM	-	LM	J	J	J	TM	TM
	C														K	K	K		
	B														N	N	N		
	A														S	S	S		
13LP+12S+2P																			

Ask us about our complete line of power and networking products.
sales-aerodef@belf.com • www.bel-aerospace-defense.com

Functions and Signals

ENABLE* (pin D2)
This signal is used to enable the input power of the converter.
Connect this pin to **SIGNAL_RTN** (pin D1) to enable input power.
Leave open to disable input power.

INHIBIT* (pin C2)
This signal is used to disable the main output of the converter.
Connect this pin to **SIGNAL_RTN** (pin D1) to disable the main output power.
Leave open to enable the main output power.

FAIL* (pin C3)
This signal indicates the status of the outputs.
If the any of the output voltages drop below 85% ± 5% the signal will go 'high'.
In case any of the output voltages rise above 90% ± 5%, the signal will be 'low'.
Typical hysteresis for main output (example is 28 V) is 2%.
Typical hysteresis for 3.3V_AUX is 0.5%.
Signal type: Open-drain (connect an external pull-up resistor to 3.3V_AUX for voltage indication).
This signal is referenced to **SIGNAL_RTN** (pins D1)

HOLDUP_P/HOLDUP_N (pin LP9/LP11)
These pins are connected to the internal DC bus of the converter (the rectified input voltage).
Connect these pins to the appropriate pins of the Hold up Module to add a holdup feature to the converter to provide a transparent ride-through during power interrupt events, IAW MIL-STD-704A-F.

Ask us about our complete line of power and networking products.
sales-aerodef@belf.com • www.bel-aerospace-defense.com

Typical Connection Diagram

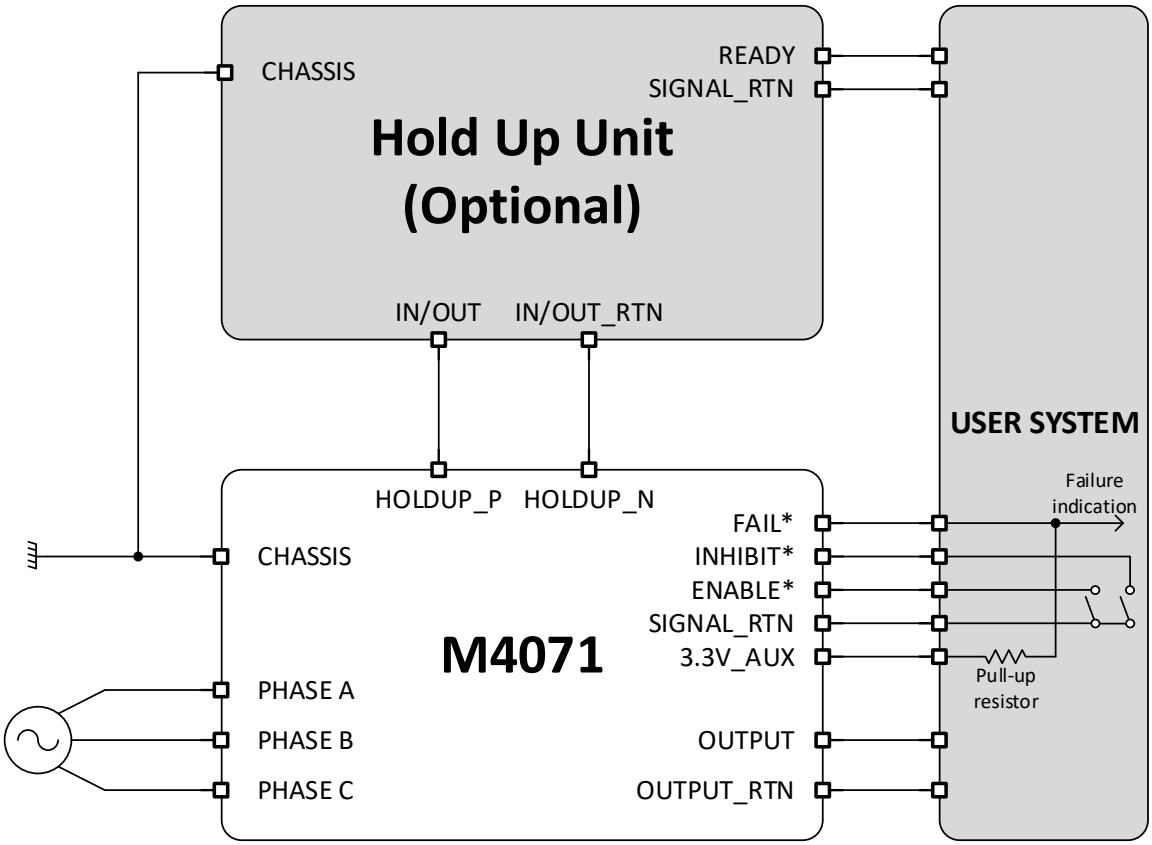

Ask us about our complete line of power and networking products.
sales-aerodef@belf.com • www.bel-aerospace-defense.com

Outline Drawing

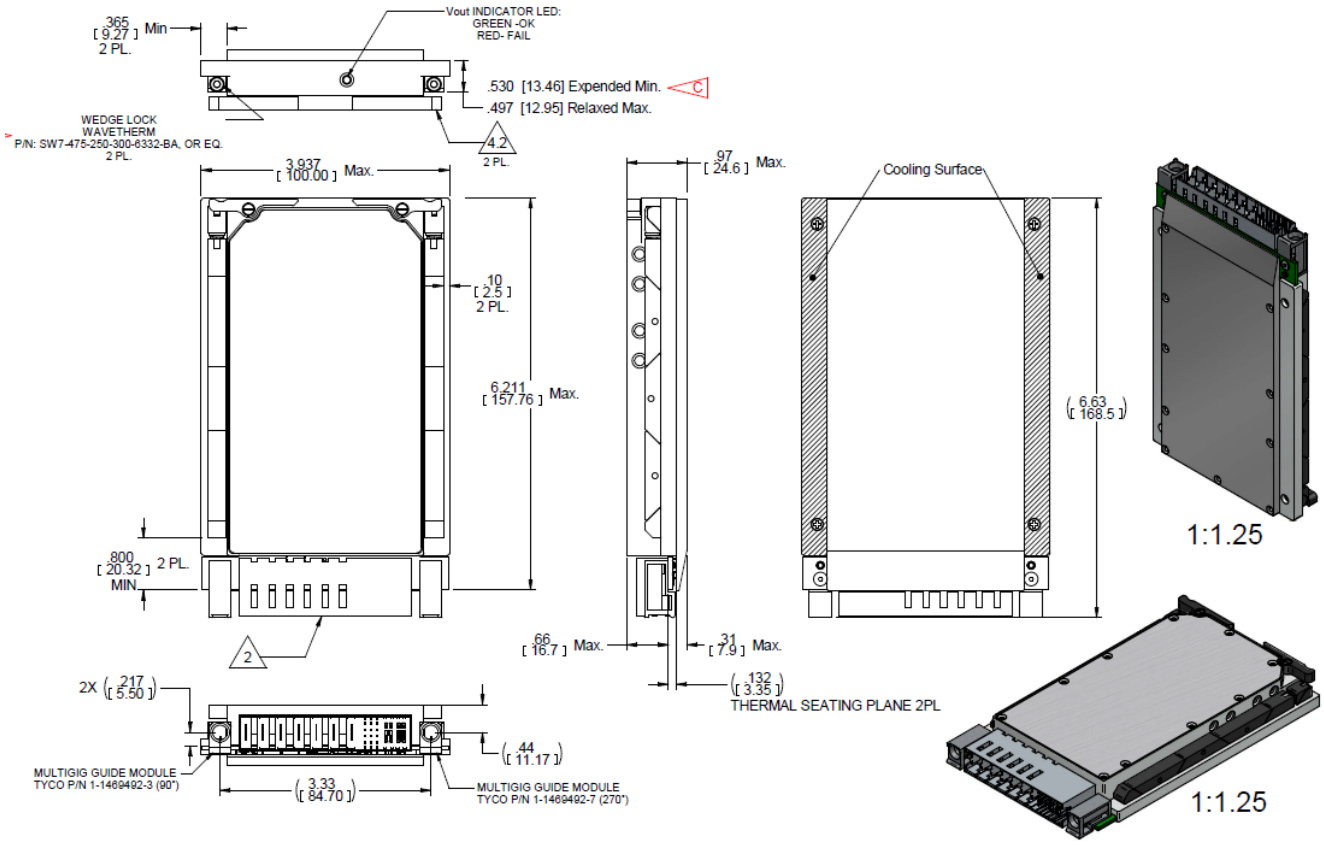

UNLESS OTHERWISE SPECIFIED
DIMENSIONS ARE IN INCH (MM).
TOLERANCES ARE:

DECIMALS	ANGLES
.XX± 0.01	± 1
.XXX±	

DO NOT SCALE DRAWING

NOTES :

1. WORKMANSHIP SHALL BE MIL-STD-454, REQT. 9.
2. I/O CONNECTOR P0: TYCO, P/N 2332791-1, OR EQ.
3. MTL. AL 6061- T6/T651/T6511 & AL 5052-H32.
4. FINISH:
   4.1. MAIN BODY AND COVERS- CONVERSION COATING PER MIL -C-5541 TYPE 1, CL 1A.
   4.2 EJECTOR/INJECTOR- BLACK ANODIZE PER MIL-A-8625, TYP II, CLASS 2.

KEYING ORIENTATION GUIDE PER ANSI VITA 46.0

VITA 62 3U PRIMARY SIDE RETAINERS COMPATIBLE

Ask us about our complete line of power and networking products.
sales-aerodef@belf.com • www.bel-aerospace-defense.com

Outline Drawing for REACH configurations:

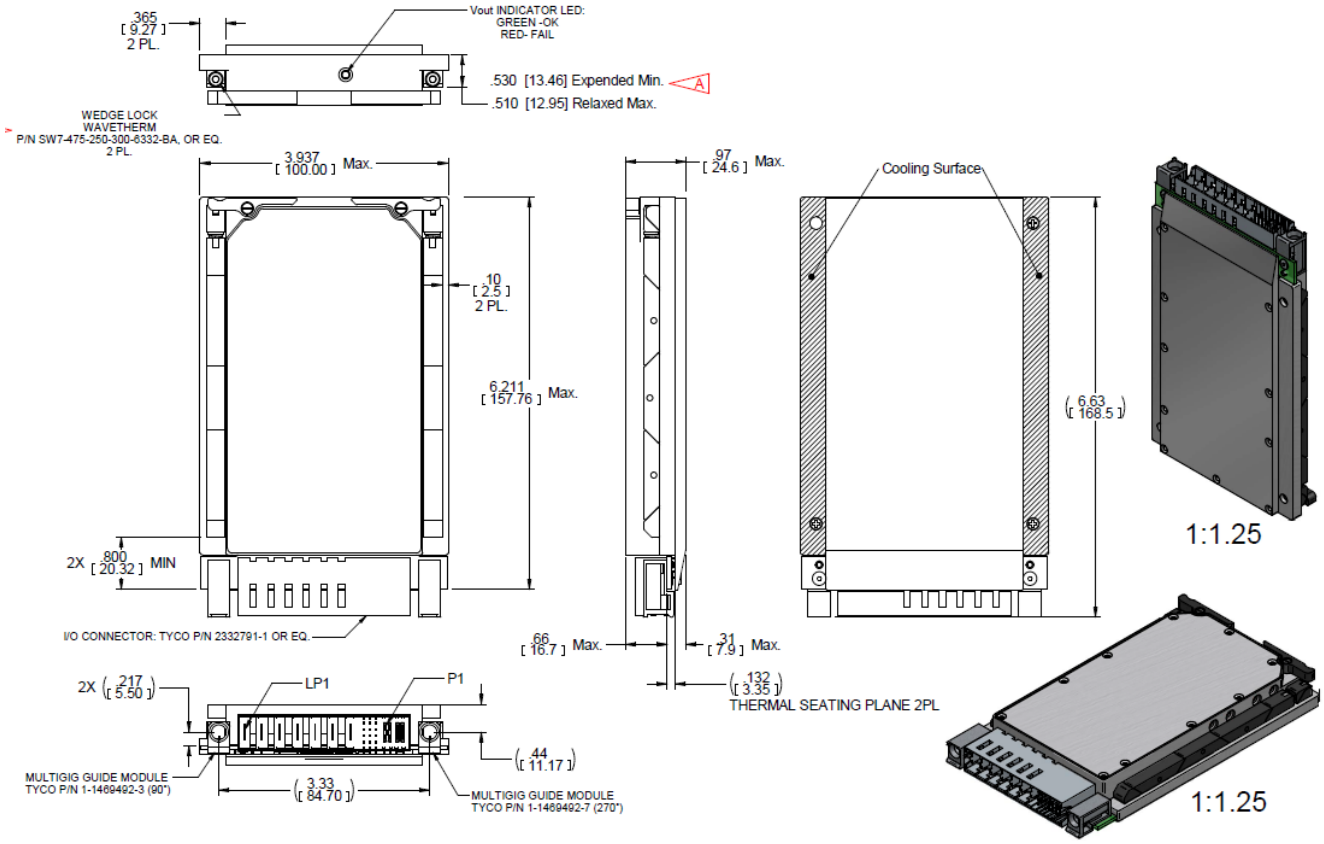

UNLESS OTHERWISE SPECIFIED
DIMENSIONS ARE IN INCH (MM).
TOLERANCES ARE:

DECIMALS	ANGLES
.XX± 0.01	± 1
.XXX±	

DO NOT SCALE DRAWING

NOTES :

1. WORKMANSHIP SHALL BE MIL-STD-454, REQT. 9.
2. MTL.
   2.1. AL 6061-T6/T651/T6511, OR EQ.
   2.2. AL 5052-H32, OR EQ.
3. FINISH:
   3.1. MAIN BODY AND COVERS:
   CHROMATE CONVERSION COATING PER MIL -DTL-5541,TYPE II, CLASS 1A, CLEAR.
   3.2 .EJECTOR/INJECTOR:
   BLACK ANODIZE PER MIL-A-8625, TYP II, CLASS 2.

KEYING ORIENTATION GUIDE PER ANSI VITA 46.0

VITA 62 3U PRIMARY SIDE RETAINERS COMPATIBLE

Ask us about our complete line of power and networking products.
sales-aerodef@belf.com • www.bel-aerospace-defense.com

Standard Configurations

Part number	Input		VS1		3.3V_Aux	
	Voltage range	Frequency	Voltage	Current	Voltage	Current
M4071-100	3-phase, 103 to 125 V_{AC}	400 Hz	28 V_{DC}	30 A	3.3 V_{DC}	0.4 A
M4071-800	3-phase, 103 to 125 V_{AC}	400 Hz	28 V_{DC}	30 A	3.3 V_{DC}	0.4 A

Special Features

- **M4071-800:** this variant is REACH Compliant
- **M4071-800:** The aluminum parts comprising this variant are chromate conversion coated per MIL-DTL-5541F, Type II CLASS 1A or eq.

Note: Specifications are subject to change without prior notice by the manufacturer.

Ask us about our complete line of power and networking products.
sales-aerodef@belf.com • www.bel-aerospace-defense.com